SCALE: 1/1

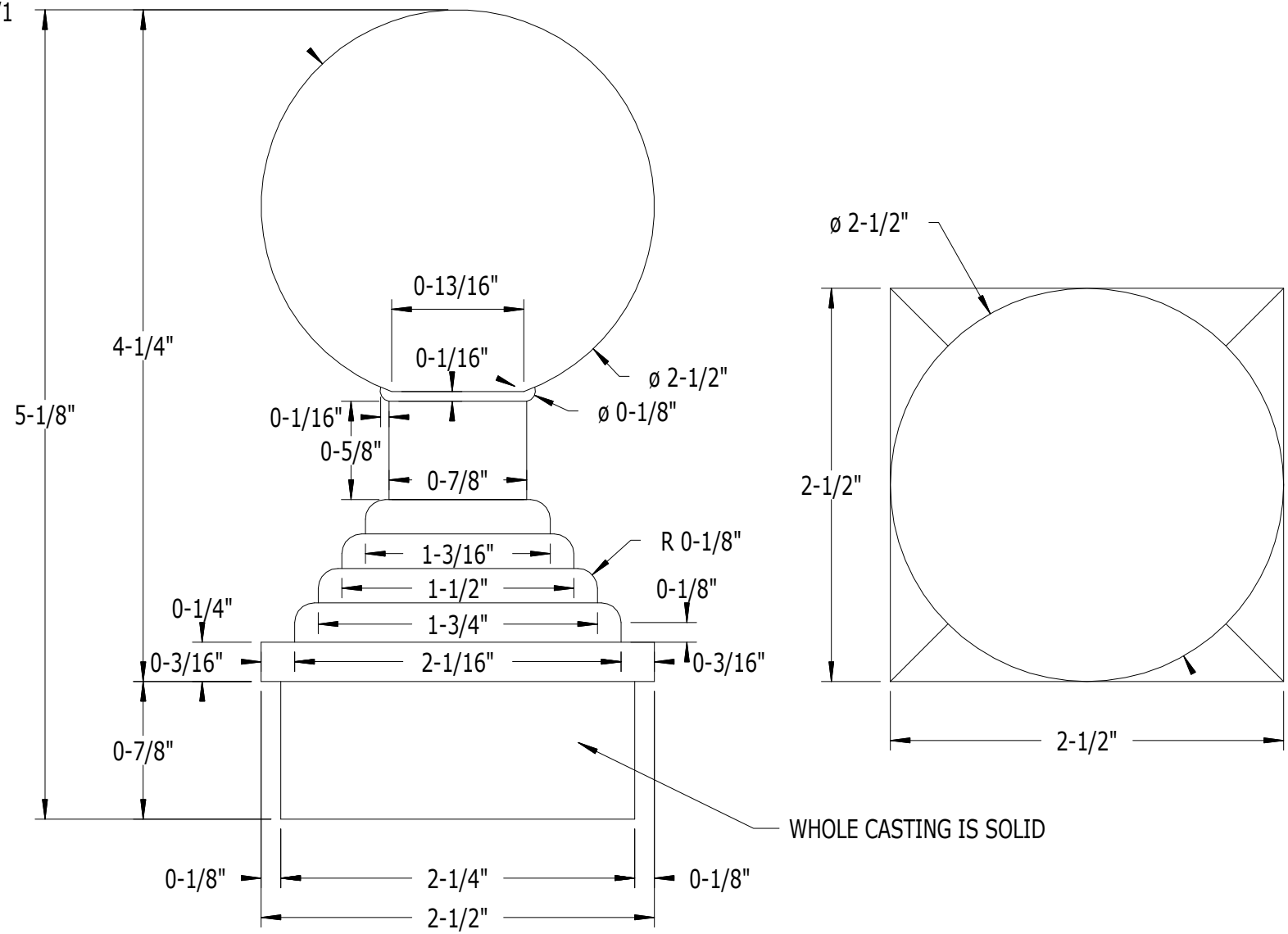

PART NO.	DESCRIPTION
951	BALL CAP FOR 2-1/2" SQ. POST

SUPERIOR
ALUMINUM PRODUCTS